The #1 supplier of shopping cart wheels and casters in the U.S.

ELASTOMASTER

WI20CH20

Premium Heavy Duty Material Handling Wheel

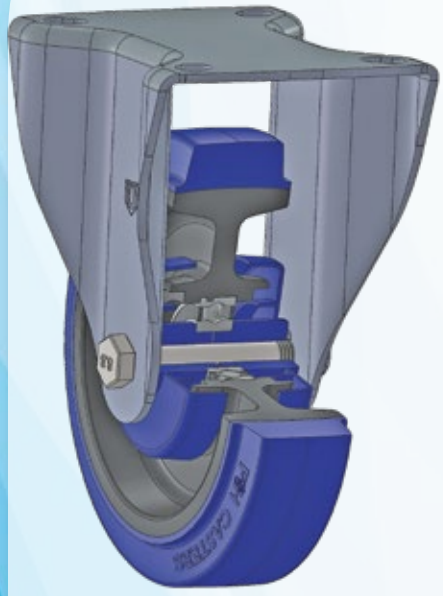

P&H's new metric line includes the **ELASTOMASTER,** a premium material handling wheel that performs exceptionally well for operations such as conveyor tow lines where wheels run continuously. These wheels combine the load bearing qualities found in steel with an exceptional level of reistance to most chemicals, high tensile strength, low rolling resistance and non-marking tread. Stronger than polypropylene, these wheels have an excellent level of resilience.

Yokes to complete caster assembly are available in both swivel and rigid models and a total lock brake model.

WHEEL

WI20CH20

Part No.	WI20CH20	WI20DH20
Diameter	100 mm	125 mm
Tread Width	25 mm	25 mm
Hub WIdth	30 mm	30 mm
Weight	.23 kgs.	.27 kgs.
Load Capacity	250 kgs.	250 kgs.
Hardness	A70	A70
Bolt Axle	M8	M8
Bearing	Precision	Precision
Threadguard	Yes	Yes

FEATURES

Wheel

- Available in 100 and 125 mm diameters
- Blue and black finish
- Easy rolling, cushioned tread
- HDPE threadguards

Caster

- Available in zinc plated steel or 304 stainless steel models
- Swivel or rigid plate attachments
- Available with total lock brake

Bearing

- Precision bearing
- Anti-rust coating
- Maintenance free

X27M4CH#20X

APPLICATIONS

- Tow lines
- Assembly lines
- Automotive
- Distribution
- Engineering
- Hospital/Medical
- Machine shop
- Metal fabrication
- Machine shop
- Dollies
- Roll cages

X26M4CH#20X

X27M4DH#20XL

OPTIONS

Part No.	Model	Plate Size	Offset Swivel	Load Capacity	Material
X26M4CH#20X	Swivel	2-3/8" x 3-5/8"	37 mm	250 kgs.	Zinc plated steel w lacquer dip
X27M4CH#20X	Rigid	2-3/8" x 3-5/8"	None	250 kgs.	Zinc plated steel w lacquer dip
X26M4CH#20XL	Total Lock (swivel)	2-3/8" x 3-5/8"	37 mm	250 kgs.	Zinc plated steel w lacquer dip
X26M4DH#20X	Swivel	2-3/8" x 3-5/8"	37 mm	250 kgs.	Zinc plated steel w lacquer dip
X27M4DH#20X	Rigid	2-3/8" x 3-5/8"	None	250 kgs.	Zinc plated steel w lacquer dip
X27M4DH#20XL	Total Lock (swivel)	2-3/8" x 3-5/8"	37 mm	250 kgs.	Zinc plated steel w lacquer dip

800 354 8622
orders@phcasters.com
www.phcasters.com

10/21/2014 Rev. 1