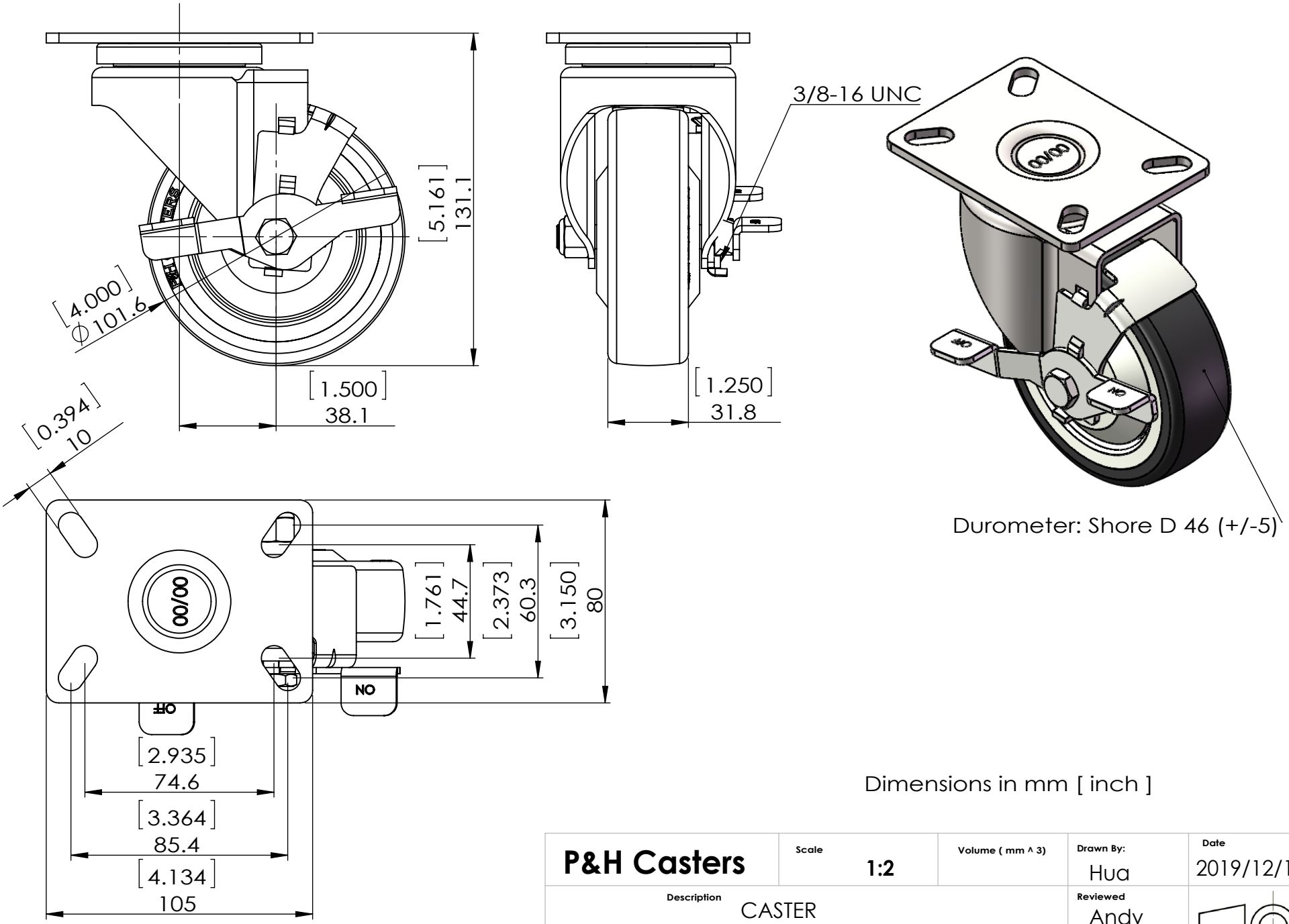

Dimensions in mm [inch]

P&H Casters	Scale 1:2	Volume (mm ^ 3)	Drawn By: Hua	Date 2019/12/18
Description CASTER			Reviewed Andy	FIRST ANGLE PROJECTION
Part Number Z26P244CTKIB	Revision REV A	Sheet 01	Date 2019/12/18	

THE INFORMATION CONTAINED IN THIS DRAWING IS CONFIDENTIAL AND SOLE PROPERTY OF P&H CASTERS CO. ANY REPRODUCTION IN PART OR AS A WHOLE WITHOUT THE WRITTEN PERMISSION OF P&H CASTERS ISPROHIBITED.